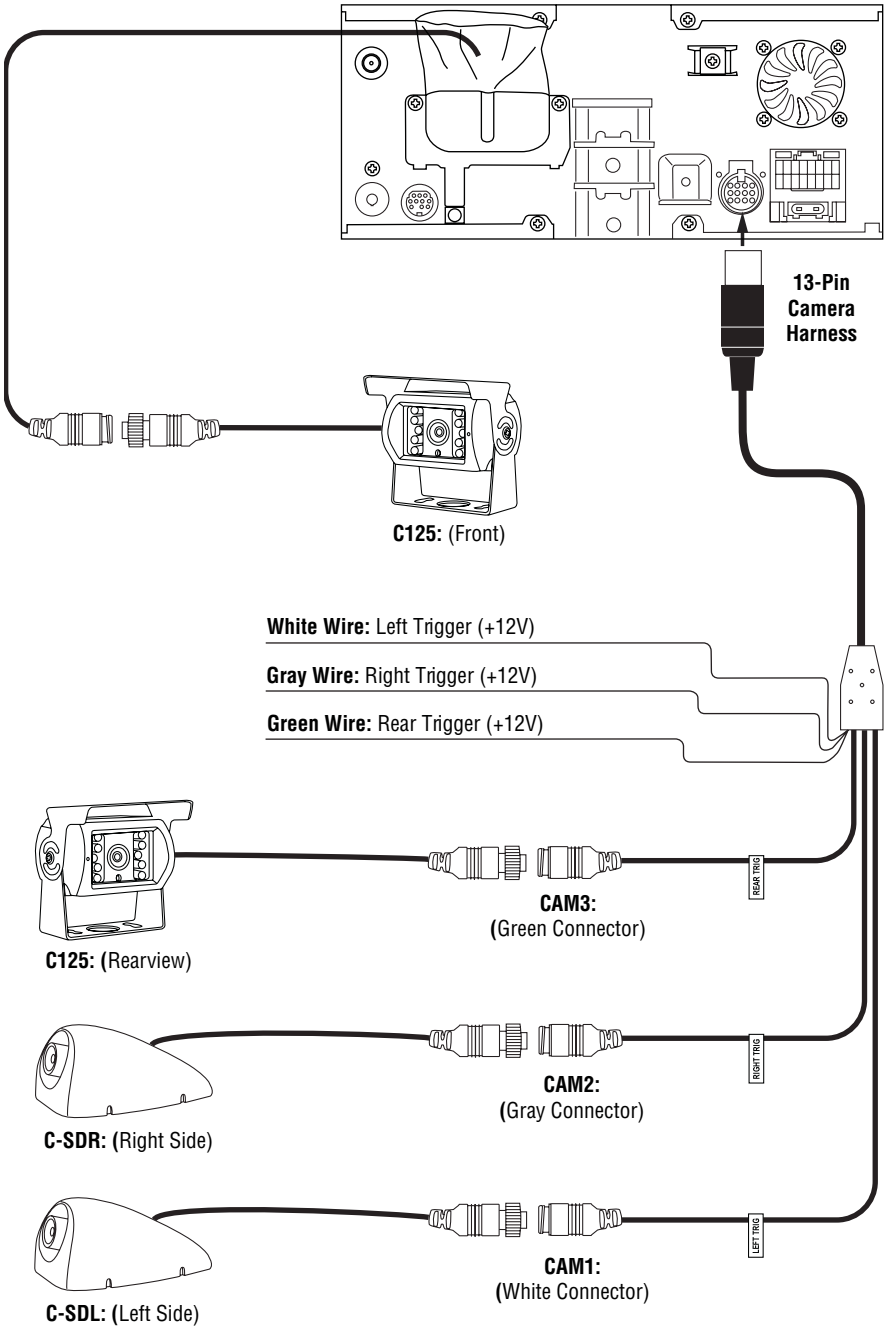Camera Connections