www.SigmaSwitches.com

Series 1

Order Desk Toll Free
(800) 488-9505

SIGMA
SWITCHES PLUS

4703 Wyland Drive · Elkhart · IN · 46516 · 574-294-5776 · Fax 574-294-8744
www.sigmaswitches.com

SIGMA SWITCHES PLUS

1 SERIES

A1 = Illuminated SPST on/off

FEATURES

- Self Cleaning Contacts.
- Custom Colors and Printing available upon request.
- Heavy-duty switching.
- Light, yet positive detent action virtually tease-proof
- Easy self-locking panel mount no mounting hardware required.
- Optional clear boot fits all 1 Series switches.
- Fully enclosed active switching elements.
- Bright neon or incandescent bulb clearly indicates ON position.

*Switches marked ⚠ are acceptable for use as power switches provided there is a plug disconnect or a switch with open contact gaps of 3 mm minimum.

MOUNTING

No hardware or tools needed; self locks into proper panel cutout .550" (13.97 mm) x 1.125" (28.58 mm).

Acceptable panel thickness range is from .025" (.64 mm) to .180" (4.57 mm).

CAUTION! Burr direction must be away from the direction of insertion.

TERMINATION

Standard is solderless .250" (6.35 mm) wide x .032" (.81 mm) thick.

ELECTRICAL RATING

AMPS	VOLTAGE
16 A	125 VAC
12 A	250 VAC
3/4 HP	125-250 VAC
10 A	14 V (T)

APPROVALS

UL, CSA, VDE, RoHS compliant

SWITCH SELECTION CHART

Part No.	Circuit	Illuminated Voltage	Special Markings	Black	White	Red	Blue	Green	Amber	Brown	Ivory
A1-09	Illum SPST on/off	12 VDC	Transparent Rocker		○				●		
AI-10	Illum SPST on/off	12 VDC	Transparent Rocker		○	●					
A1-10-28V	Illum SPST on/off	28 VDC	Transparent Rocker		○	●					
A1-19	Illum SPST on/off	12 VDC	Soft Glow Rocker	●		●					
A1-19-28V	Illum SPST on/off	28 VDC	Soft Glow Rocker	●		●					
A1-21	Illum SPST on/off	125 VAC	Transparent Rocker	●		●					
A1-25	Illum SPST on/off	125 VAC	Transparent Rocker	●			●				
A1-27	Illum SPST on/off	125 VAC	Transparent Rocker	●					●		
A1-28	Illum SPST on/off	125 VAC	Transparent Rocker	●				●			
A1-31	Illum SPST on/off	12 VDC	Transparent Rocker	●		●					
A1-31-28V	Illum SPST on/off	28 VDC	Transparent Rocker	●		●					
A1-32	Illum SPST on/off	12 VDC	Transparent Rocker			●				●	
A1-33	Illum SPST on/off	12 VDC	Transparent Rocker						●	●	
A1-34	Illum SPST on/off	12 VDC	Transparent Rocker					●		●	
A1-35	Illum SPST on/off	12 VDC	Soft Glow Rocker	●	○						
A1-36	Illum SPST on/off	12 VDC	Transparent Rocker	●			●				
A1-37	Illum SPST on/off	12 VDC	Transparent Rocker	●					●		
A1-38	Illum SPST on/off	12 VDC	Transparent Rocker	●				●			
A1-82	Illum SPST on/off	12 VDC	Transparent Rocker			●					○
A1-83	Illum SPST on/off	12 VDC	Transparent Rocker						●		○
A1-84	Illum SPST on/off	125 VAC	Transparent Rocker			●					○
A1-85	Illum SPST on/off	125 VAC	Transparent Rocker			●				●	

1 SERIES (A1-31 Shown for reference purposes)

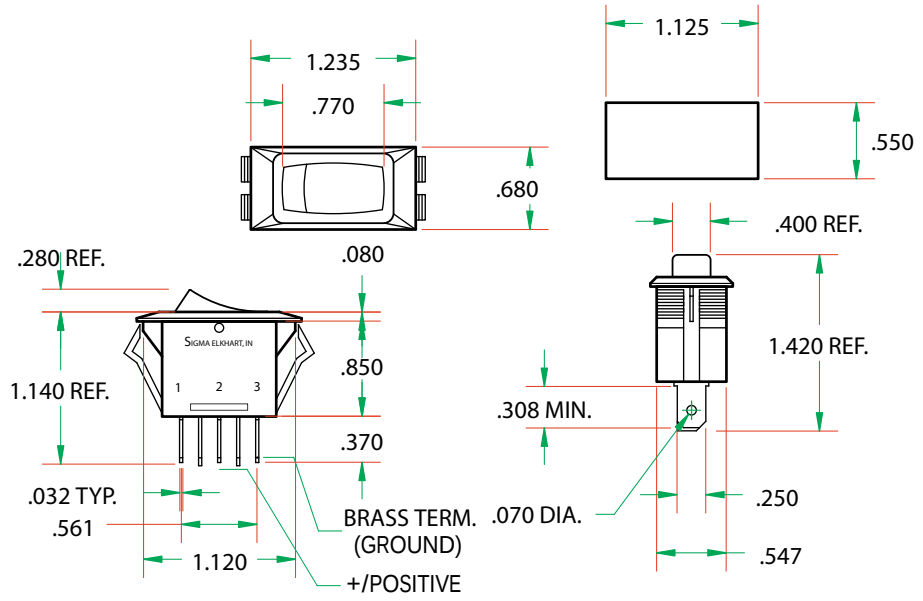

SIGMA SWITCHES PLUS
4703 Wyland Dr.
Elkhart, IN 46516
Tel: 574-294-5776
Fax: 574-294-8744

www.sigmaswitches.com

OUR COMMITMENT TO YOU

We are constantly adding to and improving our selection of Rocker, Toggle, Push Button and other types of switches. If you don't find it here, or on the pages of our website, feel free to contact us for the most current information. If you need a specially designed custom switch, we can discuss your custom design requirements as well. We look forward to helping you with your next switch purchase.

SIGMA SWITCHES PLUS

1 SERIES

F1 = SPDT mom-on/off/mom-on

FEATURES

- Self Cleaning Contacts.
- Custom Colors and Printing available upon request.
- Heavy-duty switching.
- Light, yet positive detent action virtually tease-proof
- Easy self-locking panel mount no mounting hardware required.
- Optional clear boot fits all 1 Series switches.
- Fully enclosed active switching elements.
- Bright neon or incandescent bulb clearly indicates ON position.

*Switches marked FU are acceptable for use as power switches provided there is a plug disconnect or a switch with open contact gaps of 3 mm minimum.

MOUNTING

No hardware or tools needed; self locks into proper panel cutout .550" (13.97 mm) x 1.125" (28.58 mm).

Acceptable panel thickness range is from .025" (.64 mm) to .180" (4.57 mm).

CAUTION! Burr direction must be away from the direction of insertion.

TERMINATION

Standard is solderless .250" (6.35 mm) wide x .032" (.81 mm) thick.

ELECTRICAL RATING

AMPS	VOLTAGE
13 A	125 VAC
10 A	250 VAC
5A	14 V (T)

APPROVALS

UL, CSA, RoHS compliant

SWITCH SELECTION CHART

Part No.	Circuit	Special Markings	Black	White	Red	Blue	Green	Amber	Brown	Ivory
F1-12	SPDT mom-on/off/mom-on		●							
F1-12-147S	SPDT mom-on/off/mom-on	"LOCK" PRINT	●							
F1-22	SPDT mom-on/off/mom-on								●	
F1-89	SPDT mom-on/off/mom-on									○
F1-93	SPDT mom-on/off/mom-on			○						

1 SERIES (F1-12 Shown for reference purposes)

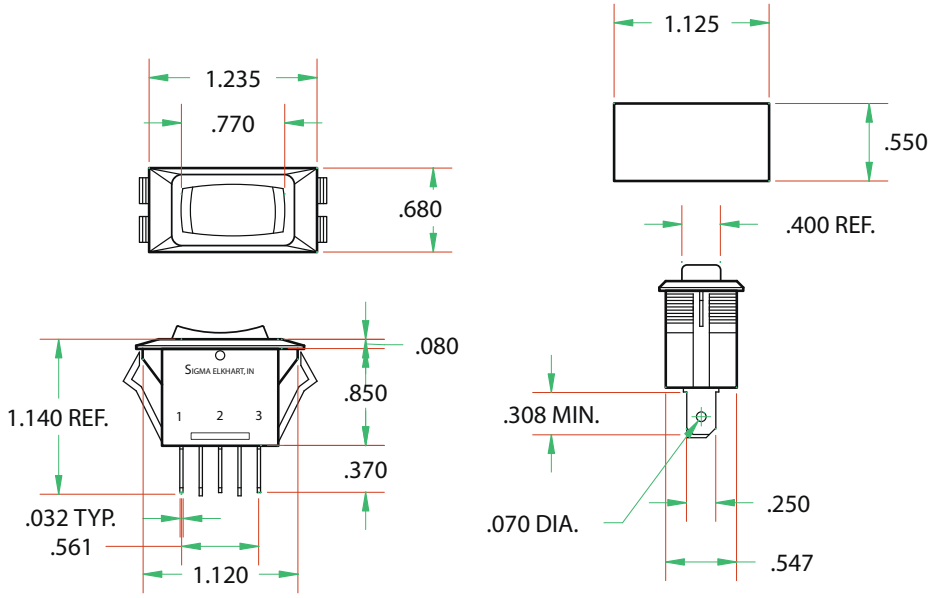

SIGMA SWITCHES PLUS
4703 Wyland Dr.
Elkhart, IN 46516
Tel: 574-294-5776
Fax: 574-294-8744

www.sigmaswitches.com

OUR COMMITMENT TO YOU

We are constantly adding to and improving our selection of Rocker, Toggle, Push Button and other types of switches. If you don't find it here, or on the pages of our website, feel free to contact us for the most current information. If you need a specially designed custom switch, we can discuss your custom design requirements as well. We look forward to helping you with your next switch purchase.

SIGMA SWITCHES PLUS

1 SERIES

N1 = SPDT on/off/mom-on

FEATURES

- Self Cleaning Contacts.
- Custom Colors and Printing available upon request.
- Heavy-duty switching.
- Light, yet positive detent action virtually tease-proof
- Easy self-locking panel mount no mounting hardware required.
- Optional clear boot fits all 1 Series switches.
- Fully enclosed active switching elements.
- Bright neon or incandescent bulb clearly indicates ON position.

*Switches marked ⚡U are acceptable for use as power switches provided there is a plug disconnect or a switch with open contact gaps of 3 mm minimum.

MOUNTING

No hardware or tools needed; self locks into proper panel cutout .550" (13.97 mm) x 1.125" (28.58 mm).

Acceptable panel thickness range is from .025" (.64 mm) to .180" (4.57 mm).

CAUTION! Burr direction must be away from the direction of insertion.

TERMINATION

Standard is solderless .250" (6.35 mm) wide x .032" (.81 mm) thick.

ELECTRICAL RATING

AMPS	VOLTAGE
13 A	125 VAC
10 A	250 VAC
5A	14 V (T)

APPROVALS

UL, CSA, RoHS compliant

SWITCH SELECTION CHART

Part No.	Circuit	Special Markings	Black	White	Red	Blue	Green	Amber	Brown	Ivory
N1-13	SPDT on/off/mom-on		●							
N1-19	SPDT on/off/mom-on		●		●					

1 SERIES (N1-13 Shown for reference purposes)

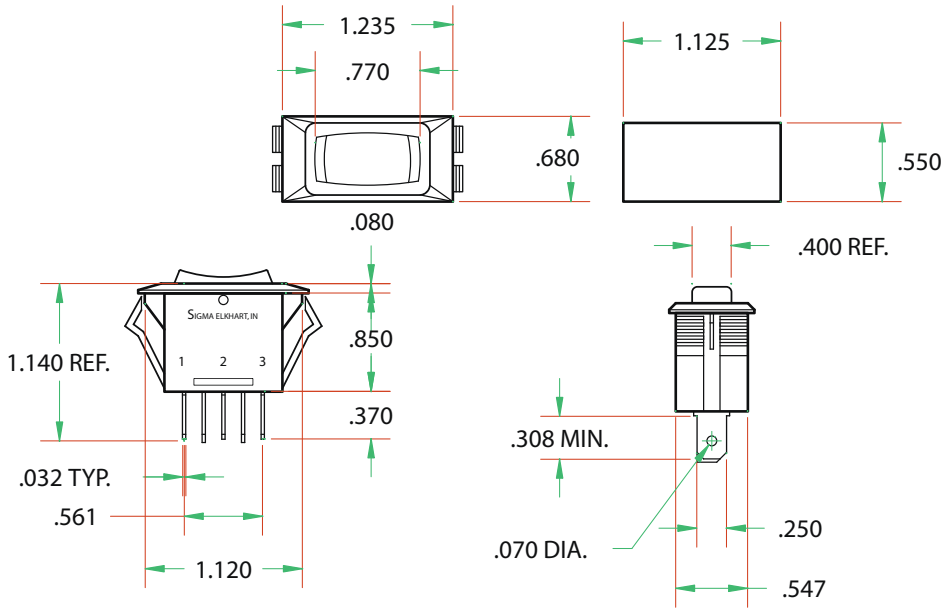

SIGMA SWITCHES PLUS
4703 Wyland Dr.
Elkhart, IN 46516
Tel: 574-294-5776
Fax: 574-294-8744

www.sigmaswitches.com

OUR COMMITMENT TO YOU

We are constantly adding to and improving our selection of Rocker, Toggle, Push Button and other types of switches. If you don't find it here, or on the pages of our website, feel free to contact us for the most current information. If you need a specially designed custom switch, we can discuss your custom design requirements as well. We look forward to helping you with your next switch purchase.